Since 1949
Acme Sanitary Ware Co. Ltd.
1/F, Acme Building, 22-28 Nanking Street, Kowloon, Hong Kong
Tel: 2388 7171 Fax: 2710 8012
Email: acme@acmesanitary.com.hk
Website: www.acmesanitary.com.hk

INAX
For Precious Life

PROJECT		REF		REV	ITEM CODE	
LOCATION		DATE			PAGE	

SANITARY WARE SPECIFICATION SHEET

Item Descriptions	Inax (Japan) "SARAS" Vitreous china S-trap integrated shower toilet with triple vortex 3.5/5L dual flushing system; Aqua Ceramic against stains and build-up of bacteria; auto open/close seat and cover and remote control
Dimensions	L710 x W385 x H472 mm
Model	100572BW10
Finish	Vitreous China (Bowl) / Plastic (Seat Unit)
Roughing -in Distance	S-Trap 305mm
Brand/ Production Origin	Inax (Japan)
Source	Acme Sanitary Ware Co. Ltd Mr. Eric Wong/ Mr. Wilson Hung
Contact Tel/Fax	(852) 2388-7171 / (852) 2710-8012
E-mail	acme@acmesanitary.com.hk
Website	www.acmesanitary.com.hk

Illustration/ Drawing

AQUA CERAMIC

SIAA ISO22196 for KOHKIN

Plasmacluster



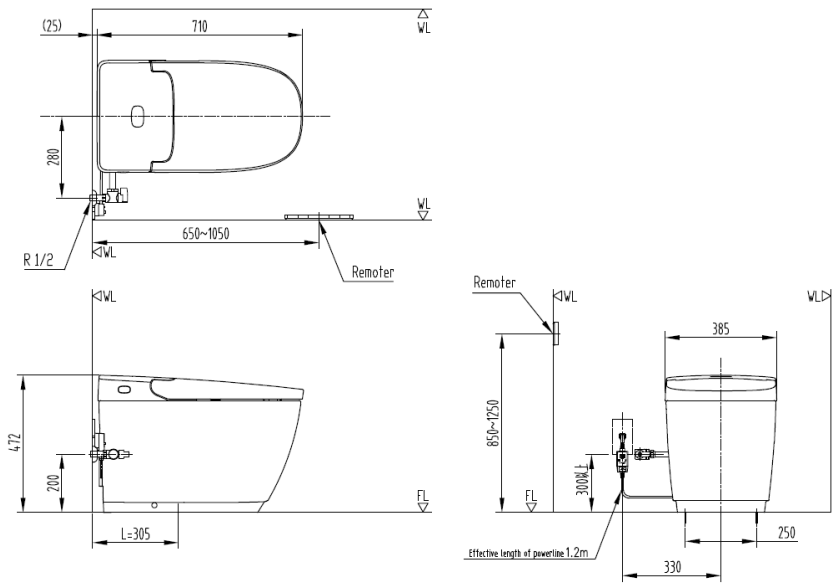



Note: Drain distance: P 120mm (Need additionally purchase P trap connector :- CF-G20PG-SET).

LIXIL

** All information of the above is for the reference only. No prior notice is made if any changes.*

Acme Sanitary Ware Co. Ltd.
1/F, Acme Building, 22-28 Nanking Street, Kowloon, Hong Kong
Tel: 2388 7171 Fax: 2710 8012
Email: acme@acmesanitary.com.hk
Website: www.acmesanitary.com.hk
Since 1949

SANITARY WARE SPECIFICATION SHEET

Remote Controller



SEAT OPEN/CLOSE
Open/close the seat.

LID OPEN/CLOSE
Open/close the lid.

STOP
- Stop posterior cleaning
- Stop feminine cleaning
- Stop warm air dryer function

SHOWER
For use in posterior cleaning.
Press this button again to enter the oscillation cleaning mode.
Press this button for the third time to enter the narrow oscillation cleaning mode.

NOZZLE POSITION
Adjust the front and rear position of nozzle cleaning.

NOZZLE CLEANSING
For use in nozzle cleansing.

BIDET
For use in feminine cleaning Press this button again to enter the oscillation cleaning mode.

DEODORIZER
Turn on/off the Auto Deodorizer function.

DRYER
Turn on/off the Dryer function.

ION
Turn on/off the plasma cluster ion function.

PREWASH
Cover the inside of bowl with a film of water for easy cleaning after use.

POWER
Turn on/off the power.

FLUSH
For use in flushing the bowl.

SEAT TEMP
Adjust the seat temperature

POWER SAVING
Lower seat temperature to save power.

WATER TEMP
Adjust warm water temperature.

MASSAGE
The strength of cleaning water changes alternately.

SPRAY STRENGTH
Adjust spray strength of posterior cleaning and feminine cleaning.

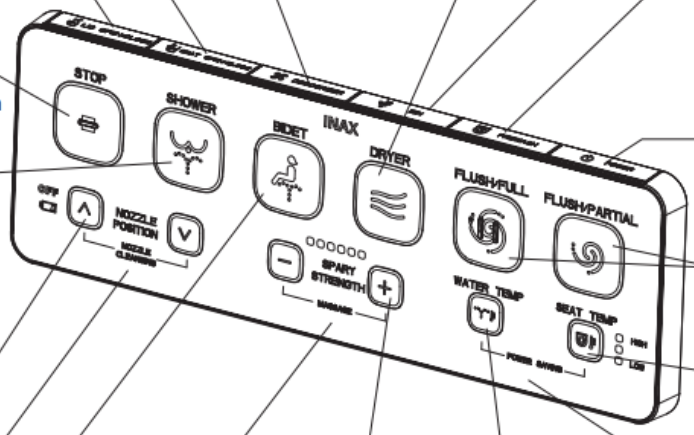

** All information of the above is for the reference only. No prior notice is made if any changes.*

Acme Sanitary Ware Co. Ltd.
1/F, Acme Building, 22-28 Nanking Street, Kowloon, Hong Kong
Tel: 2388 7171 Fax: 2710 8012
Email: acme@acmesanitary.com.hk
Website: www.acmesanitary.com.hk
Since 1949

INAX

SANITARY WARE SPECIFICATION SHEET

Roughing-in Distance		305mm
Rated Voltage		AC220V 50hz
Rated Power		1000W (Ambient Temperature 20°C, Water Temperature 15°C)
Maximum Power		Approx. 1300w
Water Pressure Range	Lowest Water Pressure And Flow	Above 0.1 Mpa (Flow Pressure) (Above 28 L/Min)
	Highest Water Pressure	0.75 Mpa (Hydrostatic Pressure)
Ambient Temperature Range		0 To 40 °C
Product Size		D710×w385×h472mm
Flush Volume		Full: 5.0 L, Half: 3.5 L
Flush Method		Siphon And Jet
Product Weight		About 42.5 Kg
Inlet Water		Tap Water
Cleaning	Warm Water Supply	Instant Heating
	Posterior Cleaning Volume	0.42L/Min
	Feminine Cleaning Volume	0.44L/Min
	Warm Water Temperature	OFF (Water Temperature), Low (About 32°C), High (About 40°C) (6 Adjustment Levels)
	Power Consumption Of Warm Water	1200w
	Safety Device	Temperature Fuse, High Temperature Sensor, Flow Switch
Warm Air Dryer	Air Volume	0.36m³/min
	Warm Air Temperature	Low (Room Temperature), Mid (About 40°C), High (About 55°C)
	Power Consumption Of Warm Air	230w
	Safety Device	Temperature Fuse, Bimetal Thermostat
Bowl Sterilization	Air Volume	Suction Air Volume: 0.04m³/Min
	Method	Plasma Cluster Ion Technology (Using Circulating Airflow)
Seat Heating	Surface Temperature	In Use: Room Temperature: About 28°C To 36°C (6 Adjustable Levels); One-touch Power Saving (8h) Setting: Room Temperature
	Power Consumption Of Heater	48w
	Safety Device	Temperature Fuse
Deodorizer	Deodorizing Type	Chemisorption By Activated Carbon Deodorizer
	Deodorizing Air Volume	Suction Air Volume: 0.11m³/Min
Remote Controller	Size	235D×80W×17.5H
	Power	Two AAA Alkaline Batteries
	Communication Method	Bluetooth
Power Cord		Effective Length: 1.0m, Power Plug With Leakage Protection

** All information of the above is for the reference only. No prior notice is made if any changes.*

Acme Sanitary Ware Co. Ltd.
1/F, Acme Building, 22-28 Nanking Street, Kowloon, Hong Kong
Tel: 2388 7171 Fax: 2710 8012
Email: acme@acmesanitary.com.hk
Website: www.acmesanitary.com.hk
Since 1949

INAX

SANITARY WARE SPECIFICATION SHEET

Others	Response to power outage	
	Automatic open/close lid and seat	●
	Full auto flush	●
	Soft light	●
	Posterior massage cleaning	●
	Oscillation cleaning	●
	Adjustable cleaning position	●
	Nozzle self-cleaning	●
	Nozzle shutter	●
	Automatic turn off Seat heating	●
	Anti-bacterial material	Only in Seat, nozzle, remote controller
	Soft close lid and seat	●
	Quick detach cover	●

Note:

1: Average power of this product at ambient temperature of 20˚C, water inlet pressure of 0.2 Mpa and water inlet temperature of 15˚C, when the water temperature and seat temperature are set to high, posterior cleaning or feminine cleaning is performed continuously and stably for 1 minute. (Seat and water temperature functions working at the same time)

2: Maximum power of the product operating with the maximum output, at ambient temperature of 20˚C and water inlet temperature of 5˚C, when the water temperature and seat temperature are set to high, based on which the user chooses a proper power supply before installation

Required Condition for Shower Toilets Installation

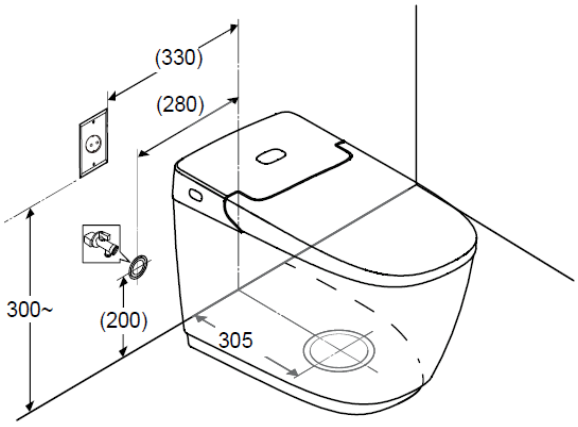

Installation Position Of Shower Toilet

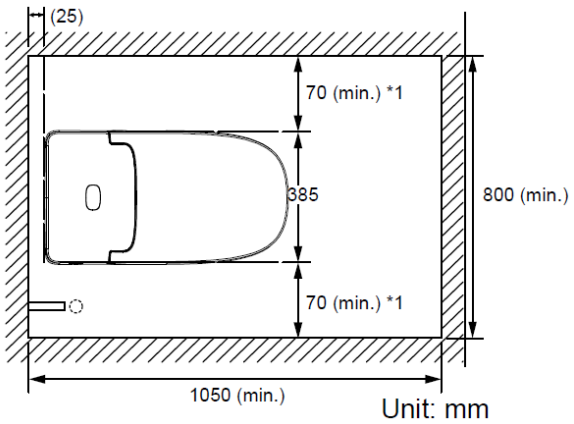

** All information of the above is for the reference only. No prior notice is made if any changes.*

Acme Sanitary Ware Co. Ltd.
1/F, Acme Building, 22-28 Nanking Street, Kowloon, Hong Kong
Tel: 2388 7171 Fax: 2710 8012
Email: acme@acmesanitary.com.hk
Website: www.acmesanitary.com.hk
Since 1949

INAX

SANITARY WARE SPECIFICATION SHEET

Parts Diagram

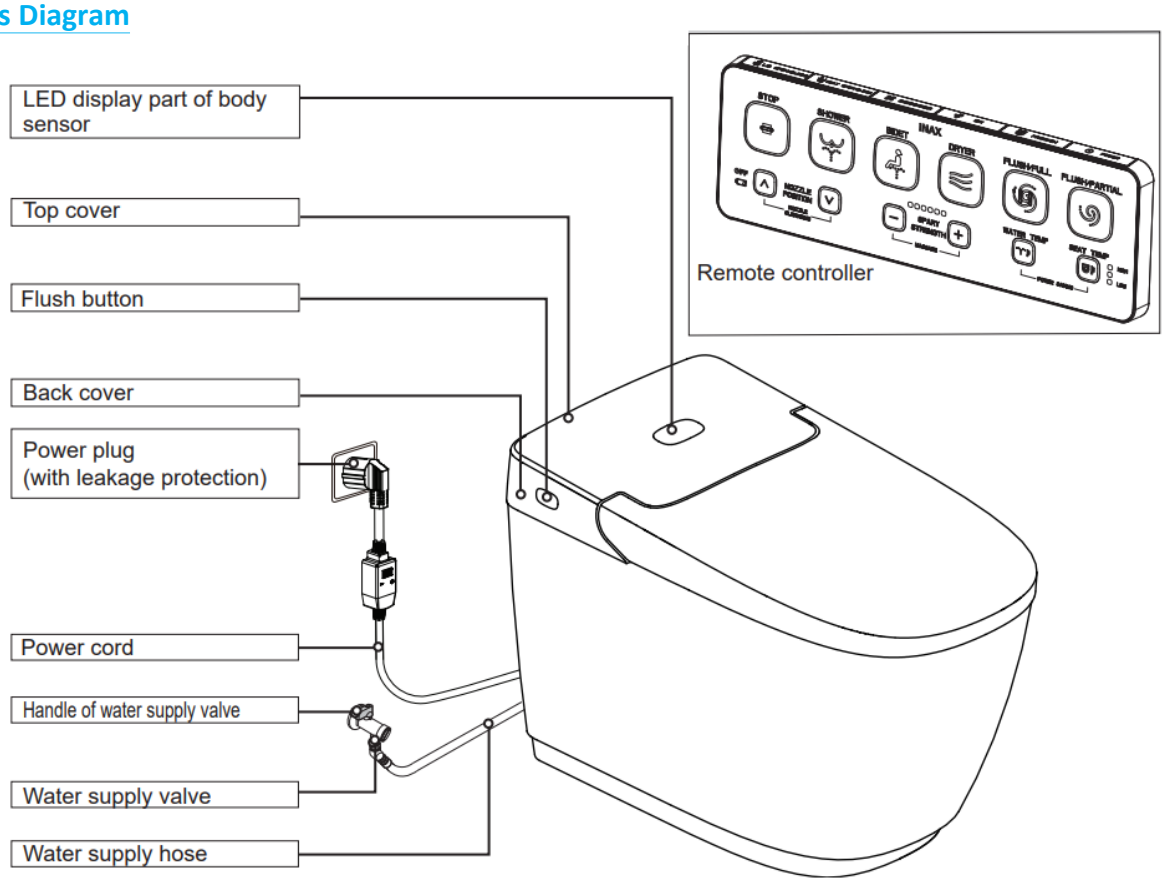

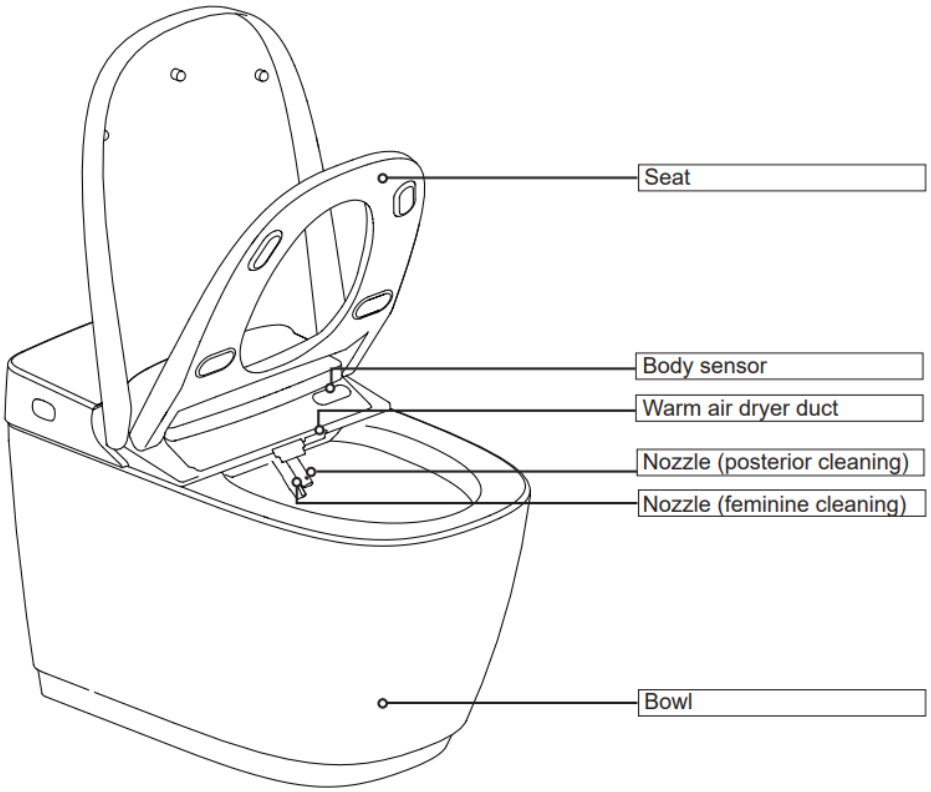

** All information of the above is for the reference only. No prior notice is made if any changes.*

Since 1949
Acme Sanitary Ware Co. Ltd.
1/F, Acme Building, 22-28 Nanking Street, Kowloon, Hong Kong
Tel: 2388 7171 Fax: 2710 8012
Email: acme@acmesanitary.com.hk
Website: www.acmesanitary.com.hk

INAX

Triple Vortex Flushing



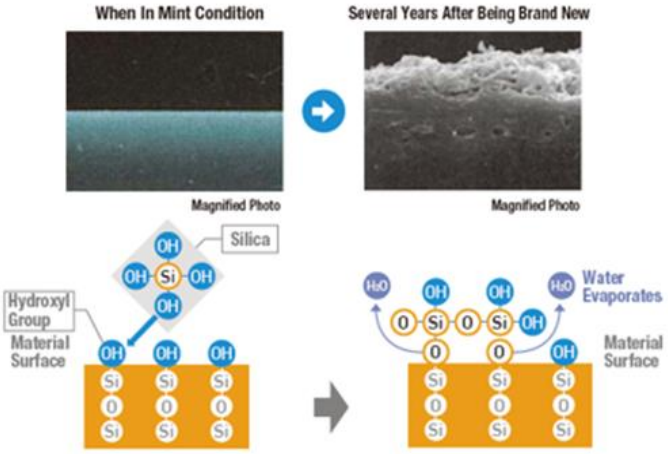

AQUA CERAMIC 100 Years of Clean

AQUACERAMIC – prevent scratch marks, marks from waste, water scale stains and the build-up of bacteria.



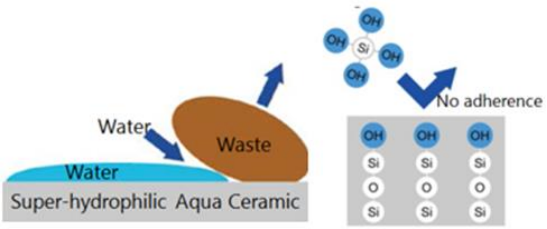

ions form clusters around micro-particles such as airborne mold, influenza viruses and mite allergens, and render them inactive through a chemical reaction. It effectively inhabit Polio virus, Coxsackie virus, Influenza virus.

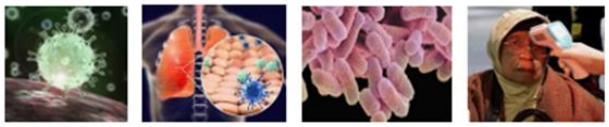

Plasmacluster Ion for kill germs,
Seamless seat to avoid Bacterial accumulation ,
Anti-bacteria Resin (seat & nozzle)

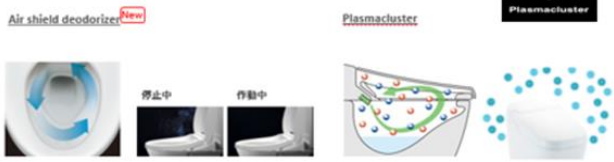

Anti-bacterial seat under ISO22196 for seat cover, nozzle & remote controller*
Detachable Nozzle Tip for easy cleaning,
Self Cleaning Nozzles
Bowl Spray before use
Dual Nozzles to avoid cross-infection
Touchless Seat Cover avoid

SIAA ISO22196 for KOHKIN





** All information of the above is for the reference only. No prior notice is made if any changes.*

Since 1949
Acme Sanitary Ware Co. Ltd.
1/F, Acme Building, 22-28 Nanking Street, Kowloon, Hong Kong
Tel: 2388 7171 Fax: 2710 8012
Email: acme@acmesanitary.com.hk
Website: www.acmesanitary.com.hk

INAX

INAX.COM.HK

INAX



Since 1949
Acme Sanitary Ware Co. Ltd.
1/F, Acme Building, 22-28 Nanking Street, Kowloon, Hong Kong
Tel: 2388 7171 Fax: 2710 8012
Email: acme@acmesanitary.com.hk
Website: www.acmesanitary.com.hk

INAX

日式潔淨之心

きれいな心



DUAL NOZZLE
雙噴嘴設計

不僅擁有臀洗噴嘴，為關愛女性特意設計了獨立抗菌婦洗噴嘴，更加懂得呵護女性健康。



AQUA CERAMIC
白無垢塗層

專利白無垢塗層，以超強的親水性能防止污垢黏附，簡單沖洗即可保持光潔淨白。



VORTEX FLUSH
漩渦沖水

利用水流的力量，360°有效沖洗座便器內壁整個表面，確保潔淨體驗。

細節中的匠心

スタッフの心意気



PLASMACLUSTER
離子抗菌

擁有正負離子群的除菌離子，有效抑制細菌和病毒，保持缽內潔淨以及舒爽清新的空氣。



自動沖水 **自動揭蓋**

免觸式設計，即使男性站立使用，亦可自動感應沖水。





一鍵沖水 **停電沖水**

遙控器及座廁設有沖水鍵，配合不同用家的使用習慣。另設緊急沖水設計，停電時亦可沖淨座廁。

Since 1949
Acme Sanitary Ware Co. Ltd.
1/F, Acme Building, 22-28 Nanking Street, Kowloon, Hong Kong
Tel: 2388 7171 Fax: 2710 8012
Email: acme@acmesanitary.com.hk
Website: www.acmesanitary.com.hk

INAX

SIAA標誌，代表滿足日本抗菌制品技術協會規定的抗菌標準，被國際消費者廣泛接受和信賴，也是產品具有良好的抗菌效果和優秀衛生價值的體現。

SIAA ISO22196 for KOHKIN







噴嘴擋板

噴嘴在不使用時存放在噴嘴保護蓋後面，有效保持噴嘴清潔。

可拆卸自潔噴嘴

使用前噴嘴會自動清潔。噴嘴前端部分可拆卸，便於清洗和更換。

三重抗菌保護

座圈、噴嘴和鉢內陶瓷上添加了含銀離子的抗菌添加劑，有效抑制細菌繁殖。獲得SIAA 22196標準抗菌認証。

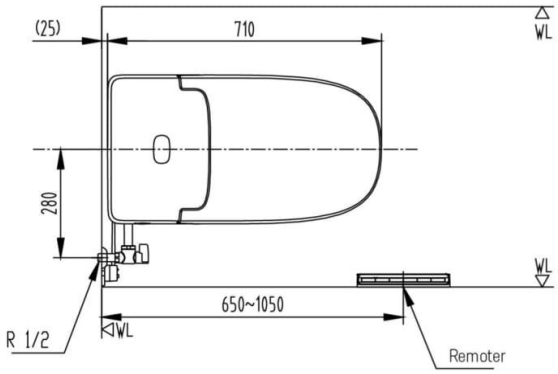



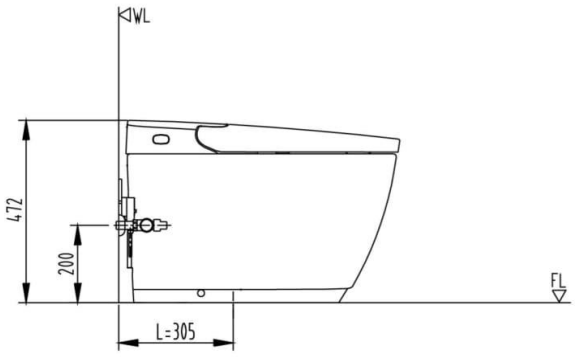

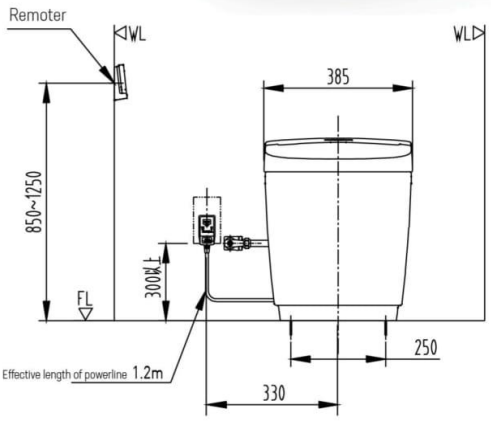

Since 1949
Acme Sanitary Ware Co. Ltd.
1/F, Acme Building, 22-28 Nanking Street, Kowloon, Hong Kong
Tel: 2388 7171 Fax: 2710 8012
Email: acme@acmesanitary.com.hk
Website: www.acmesanitary.com.hk

INAX

風的形貌由花來傳達。若能將此花，由我心傳至你心，謂之風姿花傳。
世阿弥(1363 - 1443)

商品編號		100572BW10			
商品名稱		SARAS 全功能智能座廁			
安裝坑距		地排305mm 或 *牆排120mm (*需另購配件 CF-G20PG-SET)			
產品尺寸		深 710×寬 385×高 472mm			
產品重量		約 42.5 kg			
額定電壓		AC220V; 50hz			
額定功率 /最大功率		1000W (環境溫度20°C，水溫15°C) / 約1300w			
水壓範圍	最低流量	28 L/min以上	最低水壓		最低水壓0.1 Mpa (流量壓力) 以上
			最高水壓		0.75 Mpa (靜水壓力)
環境溫度範圍		0 至 40 °C	溫暖風乾	風量	0.36m³/分鐘
防水等級		IPX4		暖風溫度	低 (室溫)、中 (約40°C)、高 (約55°C)
沖水量		5.0 / 3.5 L	抑菌潔淨	硅內抑菌	Plasmacluster 正負離子抑菌技術 (使用循環氣流)
沖洗方法		虹吸和噴射		抑菌材料認證	遙控器、座圈和噴嘴 (材質已獲SIAA認證)
自動沖水		● (適用於坐姿和站姿使用者)	溫暖座圈加熱	表面溫度	約 28°C 至 36°C (6 個可調級別)； 一鍵省電 (8h) 設置：室溫
自動翻蓋		●	除臭	除臭型	活性炭除臭劑化學吸附
硅內預潤		●		除臭風量	吸氣量: 0.11m³/Min
清洗	溫水供應	即熱式	遙控器	尺寸	235D×80W×17.5H
	噴嘴數量	2支 (分別為臀洗噴嘴 及 婦洗噴嘴)		供電方式	兩節 AAA 鹼性電池
	噴嘴自清潔	● (噴嘴尖端可拆卸清潔)		通訊方式	藍牙
	噴嘴檔板	●	電源線		有效長度：1.0米
	水溫調節	5 級 (約32°C - 40°C)	柔和夜燈		●
	噴嘴位置調整	5 級 (按 ‹/› 調整)	停電時手動沖水		●
	水力強度調整	5 級 (按 +/- 調整)	節能模式		一鍵省電
	按摩模式	●	電源線		有效長度1.0米

INAX
PART OF LIXIL